X-Club

by Burkhard Dämmer

Wood shade colors

- 20 Ivory White
- 21 Natural Cherry
- 22 Natural Beech
- 24 Yellow
- 25 Orange
- 26 Red
- 28 Blue
- 30 Turquoise
- 31 Chocolate

Info

Light Emission
Diffused / Direct

Certificates

Class I

120V - 277V

References

X A MULTIV UL

X A DIM UL
Dimmable

Packaging

Box size
30 x 30 x 16”

Weight
Gross - 16,9 Lb
Net - 10 Lb

Components

Frontal diffuser
Matt satin acrylic

Back plate
Chrome

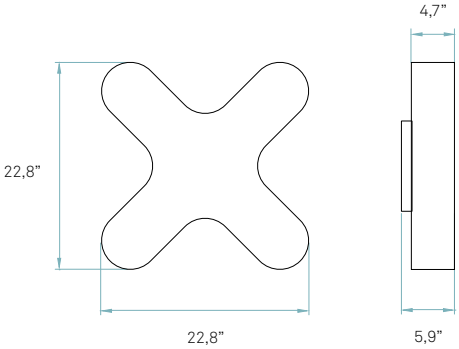

Recommended tube (Not Included)

120V - 277V
T5

Dimming

Linear fluorescent
2 x 24 w

Standard fit: Lutron

For other options, please specify dimming needs